DWG:	DZ-1500 2COMP
DATE:	4/15/2019
SCALE:	APPROX 3/8" = 1'
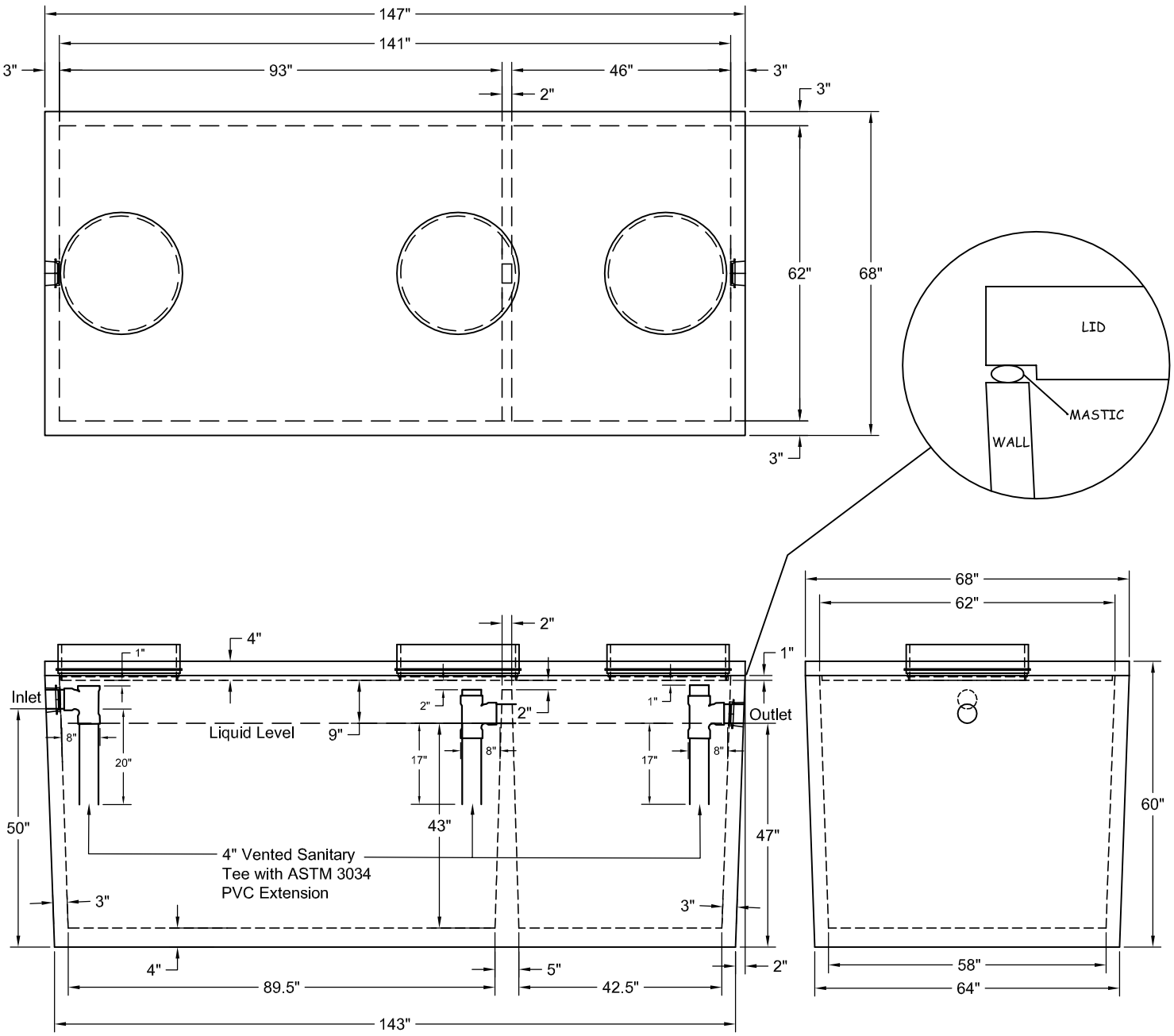
CDA Redi-Mix and Precast
6399 W. Bedrock Rd.
Post Falls, ID 83854
(208)762-0235